①

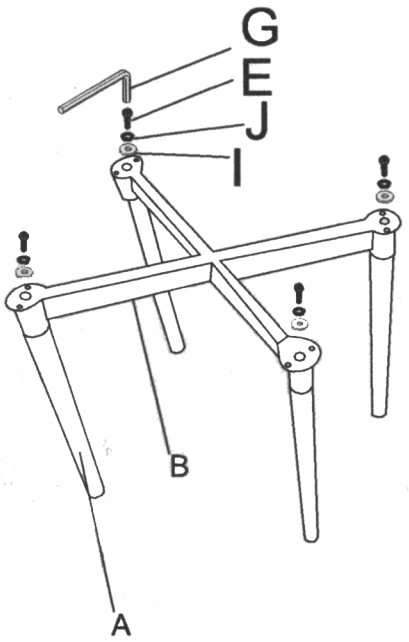

②

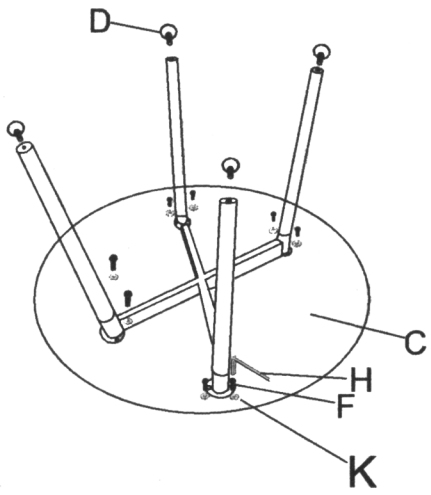

③



A X4	B X1	C X1	D X4	E X4	F X8	G X1	H X1	I X4	J X4	K X8
	