OWNER'S MANUAL

English 133 GSA

IMPORTANT SAFETY RULES

Please read, understand, and follow all instructions carefully before installing and using this product. keep for future reference.

QS 400

Krystal Clear™ Saltwater System
Certified Model Number CS3220G
220 – 240 V~

For illustrative purposes only.

Don't forget to try these other fine Intex products: Pools, Pool Accessories, Inflatable Pools and In-Home Toys, Airbeds and Boats available at fine retailers or visit our website.
Due to a policy of continuous product improvement, Intex reserves the right to change specifications and appearance, which may result in updates to the instruction manual without notice.

INTEX®

©2025 Intex Marketing Ltd. - Intex Development Co. Ltd. - Intex Recreation Corp. All rights reserved/Tous droits réservés/Todos los derechos reservados/Alle Rechte vorbehalten. Printed in China/Imprimé en Chine/Impreso en China/ Gedruckt in China.
®™ Trademarks used in some countries of the world under license from/®™ Marques utilisées dans certains pays sous licence de/Marcas registradas utilizadas en algunos países del mundo bajo licencia de/Warenzeichen verwendet in einigen Ländern der Welt in Lizenz von/**Intex Marketing Ltd. to/à/a/an Intex Development Co. Ltd., Hong Kong & Intex Recreation Corp., P.O. Box 1440, Long Beach, CA 90801** • Distributed in the European Union by/Distribué dans l'Union Européenne par/Distribuido en la unión Europea por/Vertrieb in der Europäischen Union durch/**Intex Trading B.V., Ettenseweg 46, 4706 PB Roosendaal – The Netherlands** • Distributed in the UK by **Unitex Service (UK) Limited, 124 City Road, London, England, EC1V 2NX, UK.**
www.intexcorp.com

133-GSA-R0-2607

TABLE OF CONTENTS

Warnings..... 3

Parts References..... 4

Product Specifications..... 4

Setup Instructions..... 5

Salt & Pool Water Volumes..... 6

Intex Pools Salt Table..... 7

Intex Pools Cyanuric Acid Table..... 8

Intex Pools Operating Time Table..... 9

Non-Intex Pools Salt Table..... 10

Non-Intex Pools Cyanuric Acid Table..... 10

Non-Intex Pools Operating Time Table..... 10

Operating Instructions..... 11-12

LED Code Chart..... 13

Stationary Mounting..... 14

Maintenance..... 15-16

Long Term Storage..... 16

Pool Maintenance and Chemical Definitions..... 17

Troubleshooting Guide..... 18-19

Limited Warranty..... 20

IMPORTANT SAFETY RULES

Read, Understand and Follow All Instructions Carefully Before Installing and Using this Product.

READ AND FOLLOW ALL INSTRUCTIONS

⚠ WARNING

- Always supervise children and those with disabilities.
- Children must stay away from this product and electrical cord(s).
- Children shall not play with the appliance. Cleaning and user maintenance shall not be made by children without supervision.
- This appliance is not intended for use by persons (including children) with reduced physical, sensory or mental capabilities, or lack of experience and knowledge, unless they have been given supervision or instruction concerning use of the appliance by a person responsible for their safety.
- Assembly and disassembly by adults only.
- The product must be supplied through a residual current device (RCD) having a rated residual operating current not exceeding 30mA.
- Always unplug this product from the electrical outlet before removing, cleaning, servicing or making any adjustment to the product.
- Do not bury the electrical cord. Locate the cord where it will not be damaged by lawn mowers, hedge trimmers and other equipment.
- If the supply cord is damaged, it must be replaced by the manufacturer, its service agent or similarly qualified persons in order to avoid a hazard.
- To reduce the risk of electric shock, do not use extension cords, timers, plug adaptors or converter plugs to connect unit to electric supply; provide a properly located outlet.
- Do not attempt to plug in or unplug this product while standing in water or when your hands are wet.
- Keep this transformer more than 3.5m away from the pool.
- Keep the plug of this product more than 4m away from the pool and at a height of 1.2m at least.
- Position this product away from the pool, so as to prevent children from climbing on it and accessing the pool.
- The product must not be used when people are in the water.
- This product is for use with storable pools only. Do not use with permanently installed pools. A storable pool is constructed so that it may be readily disassembled for storage and reassembled to its original configuration.
- The appliance is intended only for household use.
- This product is intended to be used only for the purposes described in the manual!
- All the information pertaining to the installation, cleaning and maintenance, please refer to the below paragraphs of the manual.

FAILURE TO FOLLOW THESE WARNINGS MAY RESULT IN PROPERTY DAMAGE, ELECTRIC SHOCK, ENTANGLEMENT OR OTHER SERIOUS INJURY OR DEATH.

These product warnings, instructions and safety rules provided with the product represent some common risks of water recreation devices and do not cover all instances of risk and danger. Please use common sense and good judgement when enjoying any water activity.

For portable Above-Ground-Pools only

PARTS REFERENCE

Before assembling your product, please take a few minutes to check the contents and become familiar with all the parts.

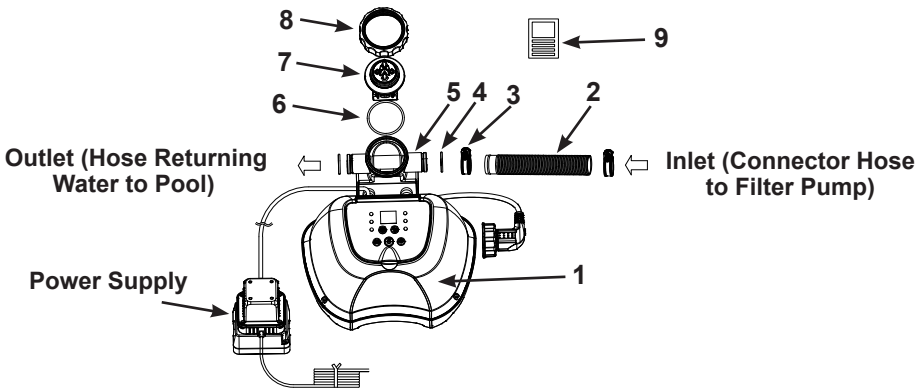

NOTE: Drawings for illustration purpose only. Actual product may vary. Not to scale. No tools are required for the assembly.

REF. NO.	DESCRIPTION	QTY.	SPARE PART NO.
1	CONTROL STATION	1	12944GS
2	CONNECTOR HOSE	1	11873
3	HOSE CLAMP	2	11489
4	CELL HOUSING O-RING	2	12947
5	CELL HOUSING	1	12945
6	TITANIUM ELECTRODE O-RING	1	11585
7	TITANIUM ELECTRODE	1	12946
8	ELECTROLYTIC CELL NUT	1	11582
9	TEST STRIPS	1	19635

When ordering parts, be sure to quote the model number and part numbers.

PRODUCT SPECIFICATIONS

Certifiled Model Number:	CS3220G
Wattage:	30 W
Ideal Salt Level:	3000 ppm (parts per million)
Maximum Chlorine Output/hour:	4 grams/hour
Filter pump minimum and maximum flow rate:	300 gallons/hour (1136 liters/hour) / 1000 gallons/hour (3785 liters/hour)
Limited Warranty:	see "Limited Warranty"
For pools and filter pumps with 1-¼" (32mm) hose connection fittings.	

SETUP INSTRUCTIONS

IMPORTANT

- **The Saltwater System requires a separate filter pump [300~1000 gph (1136~3785 lph)] to drive the water and function properly.**
- **The Saltwater System must be installed as the last piece of pool equipment in the water return line to the pool as displayed below. This location extends the life of the titanium plates.**
- **Remove any large debris and particles such as leaves, sand, insects and bugs from the pool water first.**

1. Assemble the above-ground-pool (AGP) and its filter pump according to their installation instructions.
2. Take the Saltwater System and its accessories out of the packaging.
3. Place the Saltwater System in line after the filter pump.
4. Connect the connector hose **(2)** to the Saltwater System inlet with a hose clamp **(3)**.
5. Go directly to step 6 if your pool is empty. If your above-ground-pool is filled with water, unscrew the strainer grids from the strainer connectors and insert the black hat-like plugs into the connectors, before installing the saltwater pool system.
6. Disconnect the water return hose from the filter pump connection and connect it to the Saltwater System outlet.
7. Connect the connector hose **(2)** to the filter pump outlet connection with a hose clamp **(3)**. Tighten securely.
8. Remove the black hat-like plugs that prevent water from flowing out of the pool. Now, return the strainer grids to the strainer connectors.

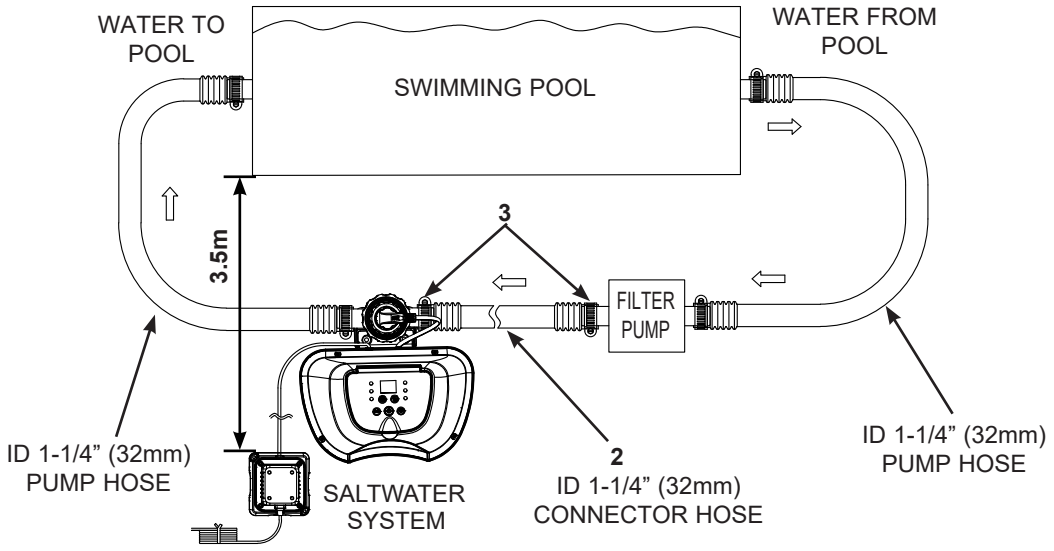

SALT & POOL WATER VOLUMES

• Which kind of salt to use:

A specific type of salt must be used in swimming pools to protect the equipment. When buying salt, check that the salt conforms with the EN16401 standard for Chemicals for use in swimming pools. Consult your local pool store or contact the salt manufacturer if you need help with verifying you have the correct salt. **Do not use iodized salt, salt containing anti-caking agent (E535) or yellow (yellow prussiate of soda) colored salt.**

When choosing the pool salt for use within the EU, please also note that the European Chemicals Agency (ECHA) requires that salt (sodium chloride) be used from registered/authorized manufacturers listed in the ECHA Article 95 List in accordance with the Biocidal Product Regulation (BPR, Regulation (EU) 528/2012). For more information, please consult ECHA's website at https://echa.europa.eu/information-on-chemicals/active-substance-suppliers.

Use only Sodium Chloride Salts

Use only sodium chloride (NaCl) salt that is at least 99.4% pure. It is also acceptable to use water conditioning salt pellets (the compressed forms of evaporated salt). However, it will take a longer time for them to dissolve. Salt is added to the pool water and the electrolytic cell uses the salt to create chlorine. The purer the salt the better the performance of the electrolytic cell.

• Optimum Salt Levels

The ideal salt level in the pool water is between 2500-3500 ppm (parts per million). The optimal level is 3000 ppm.

A too low salt level will reduce the efficiency of the Saltwater System and result in low chlorine production. A high salt level may generate a salty taste to the pool water (this may occur at a salt level above 3500-4000ppm). Too high salt level may damage the power supply and cause corrosion to the pool metal fixtures and accessories. The Salt Table page of this manual shows the correct dosage of salt needed.

• Adding Salt

1. Switch the filter pump on to start the water circulation.
2. Keep the Saltwater System turned off.
3. Determine the amount of salt to be added (see "Salt Table").
4. Evenly spread the proper amount of salt around the inside perimeter of the pool.
5. Avoid clogging the filter. Do not add salt through the skimmer.
6. Brush the pool bottom to speed up the dissolving process. Do not allow salt to pile up on the bottom of the pool. Run the filter pump 24 consecutive hours to thoroughly dissolve the salt.
7. After 24 hours and if all the salt is dissolved, turn on the Saltwater System, press code "00" flashing and set the saltwater pool system to desired operating time (see "Operating Time Table").

• Removing Salt

If too much salt has been added, the unit will beep and display "Code 92" (see "Alarm Codes"). You will need to lower the salt concentration. The only way to do so, is to partially drain the pool and refill it with fresh water. Drain and refill approximately 20% of the pool's water until the "Code 92" disappears.

• Pool Volume Calculation

Types of Pool	Gallons (pool size in feet)	Cubic Meters (pool size in meters)
Rectangular	Length x Width x Average Depth x 7.5	Length x Width x Average Depth
Circular	Length x Width x Average Depth x 5.9	Length x Width x Average Depth x 0.79
Oval	Length x Width x Average Depth x 6.0	Length x Width x Average Depth x 0.80

INTEX POOLS SALT TABLE

This table shows the amount of salt needed to achieve and maintain the optimal 3000 ppm salt level.

Pool Size		Water Capacity (Calculated at 90% for Frame Pool and 80% for Easy Set & Oval Pool)		Salt Needed for Startup 3.0g/L (3000ppm)		Salt Needed when Low Salt Detected (CODE "91")	
		(Gals)	(Liters)	(Lbs)	(Kgs)	(Lbs)	(Kgs)
INTEX ABOVE GROUND POOLS (AGP's)							
EASY SET® POOL	244cmx61cm (8'x24")	513	1942	13	6	5	2
	244cmx76cm (8'x30")	639	2419	16	7	5	2
	305cmx61cm (10'x24")	813	3077	20	9	7	3
	305cmx76cm (10'x30")	1018	3853	25	12	9	4
	366cmx76cm (12'x30")	1485	5621	37	17	13	6
	396cmx84cm (13'x33")	1926	7290	48	22	17	8
	457cmx84cm (15'x33")	2587	9792	65	29	21	10
	457cmx107cm (15'x42")	3284	12430	82	37	27	12
	457cmx122cm (15'x48")	3736	14141	94	42	31	14
METAL FRAME POOL	244cmx51cm (8'x20")	483	1828	13	6	5	2
	305cmx76cm (10'x30")	1185	4485	30	13	9	4
	366cmx76cm (12'x30")	1718	6503	43	20	15	7
	457cmx122cm (15'x48")	4440	16805	111	50	37	17
PRISM FRAME™ POOL	305cmx76cm (10'x30")	1185	4485	30	13	10	5
	366cmx76cm (12'x30")	1718	6503	43	20	15	7
	366cmx99cm (12'x39")	2270	8592	57	26	19	9
	427cmx107cm (14'x42")	3357	12706	84	38	28	13
	457cmx107cm (15'x42")	3861	14614	97	44	32	15
	457cmx122cm (15'x48")	4440	16805	111	50	37	17
PRISM FRAME™ RECT. POOL	300cmx175cmx80cm (9'10"x5'9"x31½")	935	3539	23	11	7	3
	400cmx200cmx100cm (13'1½"x6'6¾"x39½")	1806	6836	45	21	15	7
	400cmx200cmx122cm (13'1½"x6'6¾"x48")	2224	8418	56	25	17	8
	488cmx244cmx107cm (16'x8'x42")	2873	10874	72	33	24	11
SMALL RECT. FRAME POOL	220cmx150cmx60cm (7'2⅝"x4'11"x23⅝")	439	1662	11	5	3	1
	260cmx160cmx65cm (8'6½"x5'3"x25⅝")	603	2282	16	7	5	2
	300cmx200cmx75cm (9'10"x6'6¾"x29½")	1013	3834	25	12	9	4
	450cmx220cmx84cm (14'9¼"x7'2⅝"x33")	1883	7127	48	22	17	8

INTEX POOLS CYANURIC ACID TABLE

Cyanuric acid is a chemical that reduces the loss of chlorine in water due to ultraviolet rays. To maintain the pool water clear and clean, and to maximize the performance of the device, add cyanuric acid to the pool. We recommend that the cyanuric acid level be maintained at approximately 0.35% of the salt, i.e. 100 Lbs (45 Kgs) salt x 0.35% = 0.35 Lbs (0.16 Kgs) cyanuric acid. If the pool water is dirty, filthy or grimy, DO NOT add chlorine stabilizer (cyanuric acid) as this will slowdown the sanitization time of the device. Under this condition you must BOOST your pool water, refer to BOOST cycle steps. Once the pool water has been restored to clear and clean conditions you may add cyanuric acid.

Pool Size		Water Capacity (Calculated at 90% for Frame Pool and 80% for Easy Set & Oval Pool)		Cyanuric Acid Needed for Startup 0.01g/L (10ppm)	
		(Gals)	(Liters)	(oz)	(g)
INTEX ABOVE GROUND POOLS (AGP's)					
EASY SET® POOL	244cmx61cm (8'x24")	513	1942	0.7	19
	244cmx76cm (8'x30")	639	2419	0.9	25
	305cmx61cm (10'x24")	813	3077	1.1	31
	305cmx76cm (10'x30")	1018	3853	1.4	39
	366cmx76cm (12'x30")	1485	5621	2.0	56
	396cmx84cm (13'x33")	1926	7290	2.6	73
	457cmx84cm (15'x33")	2587	9792	3.5	98
	457cmx107cm (15'x42")	3284	12430	4.4	124
	457cmx122cm (15'x48")	3736	14141	5.0	141
METAL FRAME POOL	244cmx51cm (8'x20")	483	1828	0.7	19.0
	305cmx76cm (10'x30")	1185	4485	1.6	45
	366cmx76cm (12'x30")	1718	6503	2.3	65
	457cmx122cm (15'x48")	4440	16805	5.9	168
PRISM FRAME™ POOL	305cmx76cm (10'x30")	1185	4485	1.6	45
	366cmx76cm (12'x30")	1718	6503	2.3	65
	366cmx99cm (12'x39")	2270	8592	3.0	86
	427cmx107cm (14'x42")	3357	12706	4.5	127
	457cmx107cm (15'x42")	3861	14614	5.2	146
	457cmx122cm (15'x48")	4440	16805	5.9	168
PRISM FRAME™ RECT. POOL	300cmx175cmx80cm (9'10"x5'9"x31½")	935	3539	1.3	35
	400cmx200cmx100cm (13'1½"x6'6¾"x39½")	1806	6836	2.4	68
	400cmx200cmx122cm (13'1½"x6'6¾"x48")	2224	8418	2.9	84
	488cmx244cmx107cm (16'x8'x42")	2873	10874	3.8	109
SMALL RECT. FRAME POOL	220cmx150cmx60cm (7'2⅝"x4'11"x23⅝")	439	1662	0.6	17
	260cmx160cmx65cm (8'6½"x5'3"x25⅝")	603	2282	0.8	23
	300cmx200cmx75cm (9'10"x6'6¾"x29½")	1013	3834	1.4	39
	450cmx220cmx84cm (14'9¼"x7'2⅝"x33")	1883	7127	2.5	71

INTEX POOLS OPERATING TIME TABLE (WITH CYANURIC ACID)

Pool Size		Water Capacity (Calculated at 90% for Frame Pool and 80% for Easy Set & Oval Pool)		Operating Time (hours) at different ambient/air temperatures			Intex Filter pump Operating Time (hours)
		(Gals)	(Liters)	10 - 19°C (50 - 66°F)	20 - 28°C (68 - 82°F)	29 - 36°C (84 - 97°F)	
INTEX ABOVE GROUND POOLS (AGP's)							
EASY SET® POOL	244cmx61cm (8'x24")	513	1942	1	1	1	2
	244cmx76cm (8'x30")	639	2419	1	1	1	2
	305cmx61cm (10'x24")	813	3077	1	2	2	3
	305cmx76cm (10'x30")	1018	3853	2	2	2	3
	366cmx76cm (12'x30")	1485	5621	3	3	3	4
	396cmx84cm (13'x33")	1926	7290	3	4	4	5
	457cmx84cm (15'x33")	2587	9792	5	5	5	6
	457cmx107cm (15'x42")	3284	12430	6	6	7	8
	457cmx122cm (15'x48")	3736	14141	7	7	7	8
METAL FRAME POOL	244cmx51cm (8'x20")	483	1828	1	1	1	2
	305cmx76cm (10'x30")	1185	4485	2	2	2	3
	366cmx76cm (12'x30")	1718	6503	3	3	4	5
	457cmx122cm (15'x48")	4440	16805	8	8	8	9
PRISM FRAME™ POOL	305cmx76cm (10'x30")	1185	4485	2	2	2	3
	366cmx76cm (12'x30")	1718	6503	3	3	4	5
	366cmx99cm (12'x39")	2270	8592	4	4	5	6
	427cmx107cm (14'x42")	3357	12706	6	6	7	8
	457cmx107cm (15'x42")	3861	14614	7	7	8	9
	457cmx122cm (15'x48")	4440	16805	8	8	8	9
PRISM FRAME™ RECT. POOL	300cmx175cmx80cm (9'10"x5'9"x31½")	935	3539	1	2	2	3
	400cmx200cmx100cm (13'1½"x6'6¾"x39½")	1806	6836	3	3	4	5
	400cmx200cmx122cm (13'1½"x6'6¾"x48")	2224	8418	4	4	5	6
	488cmx244cmx107cm (16'x8'x42")	2873	10874	5	5	6	7
SMALL RECT. FRAME POOL	220cmx150cmx60cm (7'2⅝"x4'11"x23⅝")	439	1662	1	1	1	2
	260cmx160cmx65cm (8'6½"x5'3"x25⅝")	603	2282	1	1	1	2
	300cmx200cmx75cm (9'10"x6'6¾"x29½")	1013	3834	2	2	2	3
	450cmx220cmx84cm (14'9¼"x7'2⅝"x33")	1883	7127	4	4	4	5

IMPORTANT

The filter pump running time should be 1 hour longer than the required operating time of the Saltwater System.

NOTE: If an Intex filter pump has a timer on the GFCI, the maximum run time is 10 hours. The timer will need to be manually reset in order to extend the operating time.

SALT CALCULATION FORMULA FOR ALL POOLS

Salt Needed for Startup (Lbs)	Salt Needed for Startup (Kgs)	Salt Needed when Low Salt Detected (Lbs)	Salt Needed when Low Salt Detected (Kgs)
Water Capacity (Gals) x 0.025	Water Capacity (Liters) x 0.003	Water Capacity (Gals) x 0.0067	Water Capacity (Liters) x 0.0008

SALT TABLE FOR COMMON NON-INTEX POOLS

Water Capacity		Salt Needed for Startup		Salt Needed when Low Salt Detected (CODE "91")	
(Gals)	(Liters)	(Lbs)	(Kgs)	(Lbs)	(Kgs)
1000	3785	25	11	8	4
1500	5678	38	17	13	6
2000	7570	50	23	17	8
2500	9463	63	28	21	9
3000	11355	75	34	25	11
3500	13248	88	40	29	13
4000	15140	100	45	33	15
4500	17033	113	51	38	17

CYANURIC ACID TABLE FOR COMMON NON-INTEX POOLS

Water Capacity		Cyanuric Acid Needed for Startup 0.01g/L (10ppm)	
(Gals)	(Liters)	(oz)	(g)
1000	3785	1.3	38
1500	5678	2.0	57
2000	7570	2.7	76
2500	9463	3.4	95
3000	11355	4.0	114
3500	13248	4.7	133
4000	15140	5.4	151
4500	17033	6.0	170

OPERATING TIME TABLE FOR COMMON NON-INTEX POOLS (WITH CYANURIC ACID)

Water Capacity		Operating Time (hours) at different ambient/air temperatures			Recommend Filter pump Operating Time (hours)
(Gals)	(Liters)	10 - 19°C (50 - 66°F)	20 - 28°C (68 - 82°F)	29 - 36°C (84 - 97°F)	
1000	3785	2	2	2	3
1500	5678	3	3	3	4
2000	7570	4	4	4	5
2500	9463	5	5	5	6
3000	11355	5	6	6	7
3500	13248	6	7	7	8
4000	15140	7	8	8	9
4500	17033	8	8	8	9

OPERATION INSTRUCTIONS

1. **Turn on the filter pump.**

2. **Start up the unit:**
Plug the power cord into the electrical outlet and test the RCD (circuit breaker). Press button. Flashing code "00" appears on the electronic control station's LED, indicating that the unit is ready to be programmed.

3. **Set operating hours for Saltwater system:**
With code "00" flashing, press button to set the desired operating hours. See the "Operating Time Table" for the required operating hours related to each pool size. Pressing will increase the time from 01 to 12 hours maximum. If you have selected too many hours keep pressing to repeat the cycle. The built-in timer will now activate your Saltwater System, at the same time each day, for the number of hours you have set.
NOTE: The Saltwater System will not operate if the filter pump is not operating. Make sure to program your filter pump (or start it manually) for operation beginning 5 minutes before the Saltwater System and finishing 15 minutes after the Saltwater System.

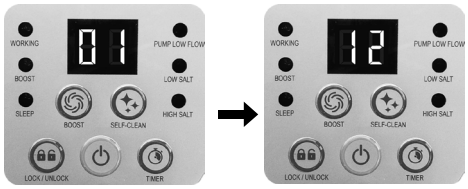

(1 to 12 hours max per cycle)

4. **Lock keypad controls:**
With the desired hour value showing, press button. A green "WORKING" indicator on the control panel will light up within a few seconds to indicate that the saltwater system has started chlorine production, the LED will display the remaining chlorinator hours until it's finished. Locking the control buttons into this setting prevents unauthorized changing of the operating cycle.
NOTE: If you forget to lock the keypad controls, the system will automatically lock it and start working 10 seconds later.

5. **Readjust operating time if necessary:**
The operating hours can be re-adjusted if necessary. Press button and the current programmed time will flash. Repeat steps 3 to 4.

6. **Stand-by/power saving mode:**
- When the cycle ends, the green "SLEEP" indicator on the control panel lights up and the LED display flashes "93". The system is now in Stand-By mode. After a while, it shuts down and sets itself in a Power Saving mode. The system will automatically turn itself back on in 24 hours, starting its daily cycle of chlorine production.
- The "SLEEP" indicator stays on, while the system is in the Power Saving mode. The LED display however, goes blank after 5 minutes. Press any button (or) to view the last LED code.

OPERATION INSTRUCTIONS (continued)

Set BOOST operating hours:

1. Press button to unlock the keypad. With LED flashing, press button to set the desired operating hours. Total of 4 settings: 36 hours, 48 hours, 60 hours and 00 (OFF). Keep pressing button to repeat the cycle.
2. With the desired hour value showing, press button to lock the keypad controls. The BOOST indicator will light up when activated.
   The system is now starting more chlorine sanitizer production. After the boost procedure has been completed, the system will automatically switch to the normal working mode. The LED display will show the remaining BOOST hours first until it's finished and then the remaining programmed saltwater system hours.
   NOTE: If you forget to lock the keypad controls, the system will automatically lock it and start working 10 seconds later.
3. To cancel the boost cycle, press button to unlock the keypad, then press button and reset the hour to "00".

Set electrode Self-Clean cycle time:

The default self-clean cycle time is 14 hours. To adjust the self-clean cycle time:

1. Press button to unlock the keypad and the LED display is flashing. Depending on your pool water calcium hardness level, press button to select the self-clean cycle time as below. Total of 3 settings: 14 hours, 10 hours and 06 hours.

Calcium Hardness	Self-clean cycle time
0 - 150 ppm	Reverse polarity every 14 hours
150 - 250 ppm	Reverse polarity every 10 hours
250 - 350 ppm	Reverse polarity every 06 hours

   NOTE: The life of the cell varies depending on water conditions, pool usage and operating time of the device. Select 14 hours cycle time to maximize the life of the electrolytic cell if the calcium hardness level is up to 150 ppm. Manual routine cleaning and maintenance will further lengthen the life of the electrolytic cell.
2. With the desired self-clean hours showing, press button to lock the keypad controls and the LED display will return to the normal operating time. The system will reverse the polarity of the electrode **(7)** every time according to the selected hours.
   NOTE: If you forget to lock the keypad controls, the system will automatically lock it and start working 10 seconds later.

LED CODE CHART

LED Reading	Definitions
00	Stand-By Mode (Start-up)
01	Minimum Operating Hour (1 hour remaining)
02	Operating Hours (2 hours remaining)
03	Operating Hours (3 hours remaining)
04	Operating Hours (4 hours remaining)
05	Operating Hours (5 hours remaining)
06	Operating Hours (6 hours remaining)
07	Operating Hours (7 hours remaining)
08	Operating Hours (8 hours remaining)
09	Operating Hours (9 hours remaining)
10	Operating Hours (10 hours remaining)
11	Operating Hours (11 hours remaining)
12	Maximum Operating Hours (12 hours remaining)
36	Boost Mode (36 hours remaining)
48	Boost Mode (48 hours remaining)
60	Boost Mode (60 hours remaining)
90	Alarm Code (Low Pump Flow / No Flow)
91	Alarm Code (Low Salt Level)
92	Alarm Code (High Salt Level)
93	Stand-By Mode (Operating Process finished)
"BLANK"	No Power or "Power Saving Mode" waiting to start next Saltwater System cycle.

IMPORTANT

When Code "90" alarm is shown, ensure the timer of the filter pump is set one (1) hour longer than the Saltwater System.
If the filter pump does not have a built-in timer, the filter pump needs to be turned on/off manually every day.

SALTWATER SYSTEM STATIONARY MOUNTING

Some countries, especially in the European community, require the product to be secured to the ground or to a base in a permanent upright position. Check with your local authorities to determine if there is a regulation in your area regarding above-the-ground swimming pool filter pumps. If yes, then the product can be mounted to a platform using the two holes located in the base. See drawing below.

The product can be mounted on a cement base or onto a wooden platform to prevent accidental tipping. The mounting holes are 6.4 mm in diameter. Total assembly must exceed 18 kg.

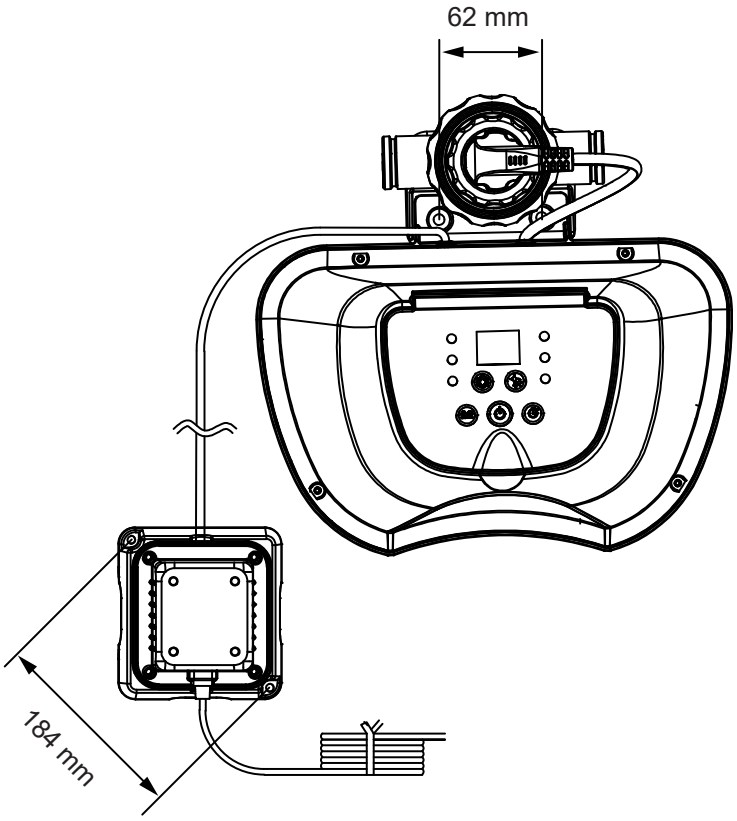

MAINTENANCE

IMPORTANT

Unplug the power cord before cleaning your system. Also insert the black hat-like plugs in the strainer opening to prevent water spillage. After completing all maintenance tasks, you must plug the power cord back in and remove the plugs.

Titanium Electrode Cleaning

The titanium electrode has a self cleaning function incorporated into the electronic control's programming. In most cases this self cleaning action will keep the electrode working at optimum efficiency. If the pool water is hard (high mineral content) the electrode may require periodic manual cleaning. To maintain maximum performance, we recommend that you open and visually inspect the titanium electrode **(7)** monthly.
The following steps provide instructions on how to clean your cell.

Inspection and cleaning:

1. Switch off the unit, unplug the power cord from the electrical socket.
2. To prevent water from flowing out of the pool, unscrew the strainer grids from the strainer connectors and insert the hat-like plugs into the strainer connectors.
3. Disconnect the 2 hoses from the Saltwater System **(see drawings 1~3).**
4. Unscrew the titanium electrode plug collar, disconnect the plug from the titanium electrode **(7) (see drawing 4).**
5. Unscrew the cell nut, remove the titanium electrode from the cell housing **(see drawing 5).**
6. Place the titanium electrode in a container and pour kitchen grade vinegar into the container until the titanium electrode is immersed. Soak for 1 hour and then flush with a high-pressure garden hose **(see drawing 6).**
7. Reverse steps 3, 4, 5 and 6 to reconnect the electrolytic cell.

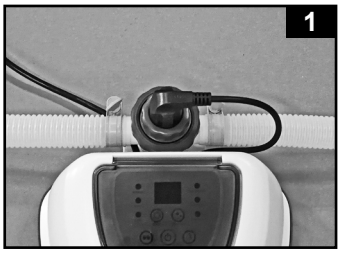

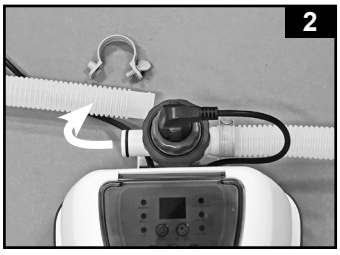

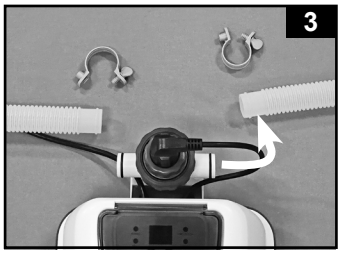

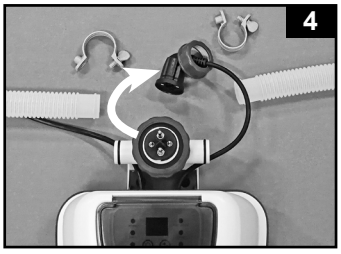

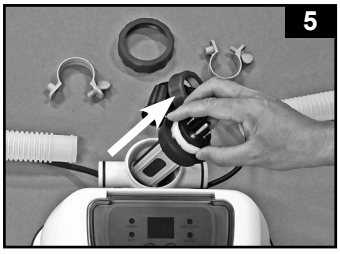

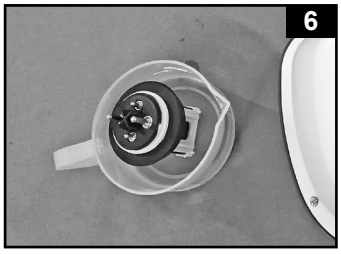

MAINTENANCE (continued)

INTEX® TEST STRIPS (PACKED WITH THE PRODUCT)

The Test Strips can test the "Free Chlorine", "pH", "Calcium Hardness" and "Total Alkalinity" levels at the same time. We recommend that you test the water chemistry weekly, and maintain the chlorine concentration at 1.0-3.0 ppm.

Directions and Use

1. Dip the entire strip into the water and remove immediately.
2. Hold the strip level for 15 seconds. Do not shake excess water from the strip.
3. Now compare the strip pad to the color chart on the packaging label. If necessary, adjust the chemical level in the pool water. It is very important, to use the proper technique when testing the water's chemical level. Read and follow the written strip instructions carefully.

LONG TERM STORAGE

1. Disconnect the power cord from the electrical outlet.
2. After the pool is completely empty, disconnect the Saltwater System from the hoses by reversing the installation instructions.
3. Air-dry the unit before you store it. This might be a good time to visually inspect and clean the electrolytic cell.
4. Store the unit and accessories in a dry place. The temperature should be controlled, between 32 degrees Fahrenheit (0 degrees Celsius) and 97 degrees Fahrenheit (36 degrees Celsius).
5. The original package can be used for storage.

POOL MAINTENANCE & CHEMICAL DEFINITIONS

Preferred Water Chemistry Reading			
	Minimum	**Ideal**	**Maximum**
Free Chlorine	0	1.0 - 3.0 ppm	5.0 ppm
Combined Chlorine	0	0 ppm	0.2 ppm
pH	7.2	7.4 - 7.6	7.8
Total Alkalinity	40 ppm	80 ppm	120 ppm
Calcium Hardness	50 ppm	100 - 250 ppm	350 ppm
Stabilizer (Cyanuric Acid)	10 ppm	10 - 30 ppm	30 ppm

Consult with local swimming pool dealer for water treatment.

Free Chlorine -	Is the chlorine residual present in pool water.
Combined Chlorine -	Is formed by the reaction of free chlorine with ammonia wastes. Result if too high - Sharp chlorinous odor, eye irritation.
pH -	A value that indicates how acidic or basic a solution is. Result if too low - Corroded metals, eye & skin irritation, destruction of total alkalinity. Result if too high - Scale formation, cloudy water, shorter filter runs, eye & skin irritation, poor chlorine efficiency.
Total Alkalinity -	Indicates the degree of the water's resistance to change in pH. It determines the speed and ease of pH change, so always adjust total alkalinity before adjusting the pH level. Result if too low - Corroded metals, eye & skin irritation. Low alkalinity will cause the pH to be unstable. Any chemical added to the water will have an affect on pH. Result if too high - Scale formation, cloudy water, eye & skin irritation, poor chlorine efficiency.
Calcium Hardness -	Refers to the amount of calcium and magnesium dissolved in the water. Result if too high - Eye & skin irritation, difficulty balancing water and poor chlorine efficiency. Scale will form and will cause the water to become cloudy.
Stabilizer - (Cyanuric Acid)	Stabilizers extend the life of chlorine in swimming pools.

- Do not add pool chemicals directly to the skimmer. This may damage the cell.
- Maintaining a salt and sanitizer level above the recommended range can contribute to the corrosion of the pool equipment.
- Check the expiry date of the test kit as the test results may be inaccurate if the kit is used after that date.
- If, due to heavy pool usage, it is required to increase the sanitizer level, then use a chemical based on trichlor, TCCA or dichloro.

TROUBLESHOOTING GUIDE

PROBLEM	CAUSE	SOLUTION
INSUFFICIENT CHLORINE	• Insufficient operating hours of the Saltwater System. • The salt level in the pool water is less than 2000ppm. This is insufficient. • Chlorine loss due to intense sunlight exposure. • The bather load has increased. • Clogged or dirty electrolytic cell. • High UV level exposure.	• Increase the daily Saltwater System operating time. See "Operating Instructions". • Check the salt level with the Test Kit. Adjust as needed. See "Salt & Pool Water Volumes". • Use a pool cover when the pool is not in use and/or when the unit is operating. • Remove the cell for inspection, clean it if necessary. See "Maintenance". • Cover the pool with a pool cover for 2 days with the device running and then test the water using the test strips. • If the pool is clean and clear, add stabilizer to the water and then test the water with the device running.
WHITE FLAKES IN THE WATER	• Excessive calcium hardness is present in the pool water.	• Drain about 20 to 25% of the pool water and add fresh water to decrease the calcium hardness. Inspect the electrolytic cell for scale buildup. Clean the electrolytic cell if necessary.
NO LED DISPLAY	• No power supply. • RCD has not reseted. • A power fuse has blown. • LED failure.	• Find out the switch and turn on. • Reset the RCD. • Contact Intex Service Center.

TROUBLESHOOTING GUIDE (continued)

LED PANEL CODE	PROBLEM	SOLUTION
LED Panel Code Flash & Alarm On (**NOTE**: Always turn off the power before cleaning and servicing).		
	1. Filter pump not attached to system and/or switch on.	• Ensure a filter pump with the correct flow rate is attached and operating. See "Setup Instruction".
	2. Circulation line is blocked.	• Remove the black hat-like plugs from the pool strainer connectors. • Clear your filter cartridge and cell from debris and dirt. See "Maintenance". • Release all trapped air in the circulation line. See the filter pump manual.
	3. Incorrect inlet and outlet hose direction.	• Check the direction of the inlet and the outlet hose. Reverse the hoses if necessary. See "Set Up Instructions".
	4. Scale on flow sensor pins inside the titanium electrode.	• Clean the titanium electrode. See "Maintenance" section.
	5. Electrode cord is loose.	• Plug the cord into the electrode and tighten the plug collar firmly.
	6. Inner timer conflict between filter pump and saltwater system.	• Reset both timers on the filter pump and saltwater system. See "Operating Instructions".
	1. Dirt or scale on titanium plates.	• Remove primary electrolytic cell for inspection. Clean it if necessary. See "Maintenance".
	2. Low salt level / No salt.	• Add salt. See "Salt & Pool Water Volumes".
	3. Electrolytic cell cord is loose.	• Ensure that the cell cord is plugged firmly into the cell housing receptacle.
	4. Possible electrolytic cell failure.	• Contact Intex Service Center. Replace the cell if needed.
	1. High salt level. **2.** Water temperature > 35ºC. **3.** Titanium electrode failure.	• Partially drain the pool and refill it with fresh water. See "Salt & Pool Water Volumes". • Contact Intex Service Center. • Contact Intex Service Center.

IMPORTANT

If you continue to experience difficulty, please contact our Consumer Service Department for assistance. See separate "Authorized Service Centers" sheet.

LIMITED WARRANTY

Your Krystal Clear™ Saltwater System has been manufactured using the highest quality materials and workmanship. All Intex products have been inspected and found free of defects prior to leaving the factory. This limited warranty applies only to the Krystal Clear™ Saltwater System and accessories listed below.

This limited warranty is in addition to, and not a substitute for, your legal rights and remedies. To the extent that this warranty is inconsistent with any of your legal rights, they take priority. For example, consumer laws across the European Union provide statutory warranty rights in addition to the coverage you receive from this limited warranty: for information on EU-wide consumer laws, please visit the European Consumer Center website at http://ec.europa.eu/consumers/ecc/contact_en/htm.

The provisions of this limited warranty apply only to the original purchaser and are not transferable. This limited warranty is valid for the period noted below from the latter of the date of the initial retail purchase or delivery. Keep your original sales receipt with this document, as proof of purchase will be required and must accompany warranty claims or the limited warranty will be invalid.

Krystal Clear™ Saltwater System Warranty – 2 Years
Titanium electrode Warranty – 2 Years
Hoses & Fittings Warranty – 180 days

If you find a manufacturing defect in the Krystal Clear™ Saltwater System during the warranty periods noted above, please contact the appropriate Intex Service Center listed in the separate "Authorized Service Centers" sheet. If the item is returned as directed by the Intex Service Center, the Service Center will inspect the item and determine the validity of the claim. If the item is covered by the provisions of the warranty, the item will be repaired or replaced, with the same or comparable item (at Intex's choice) at no charge to you.

Other than this warranty, and other legal rights in your country, no further warranties are implied. To the extent possibly in your country, in no event shall Intex be liable to you or any third party for direct or consequential damages arising out of the use of your Krystal Clear™ Saltwater System, or Intex or its agents' and employees' actions (including the manufacture of the product). If your country does not allow the exclusion or limitation of incidental or consequential damages, this limitation or exclusion does not apply to you.

You should note that this limited warranty does not apply in the following circumstances:

- If the Krystal Clear™ Saltwater System is subject to negligence, abnormal use or application, accident, improper operation, improper voltage or current contrary to operating instructions, improper maintenance or storage;
- If the Krystal Clear™ Saltwater System is subject to damage by circumstances beyond Intex's control, including but not limited to, ordinary wear and tear and damage caused by exposure to fire, flood, freezing, rain, or other external environmental forces;
- To parts and components not sold by Intex; and/or
- To unauthorized alterations, repairs or disassembly to the Krystal Clear™ Saltwater System by anyone other than Intex Service Center personnel.

The costs associated with the loss of pool water, chemicals or water damages are not covered by this warranty. Injury or damage to any property or person is not covered by this warranty.

Read the owner's manual carefully and follow all instructions regarding proper operation and maintenance of your Krystal Clear™ Saltwater System. Always inspect your product prior to use. This limited warranty will be void if use instructions are not followed.